Lecture-12

(a)Basic TTL NAND gate; (b)diode equivalent for Q1

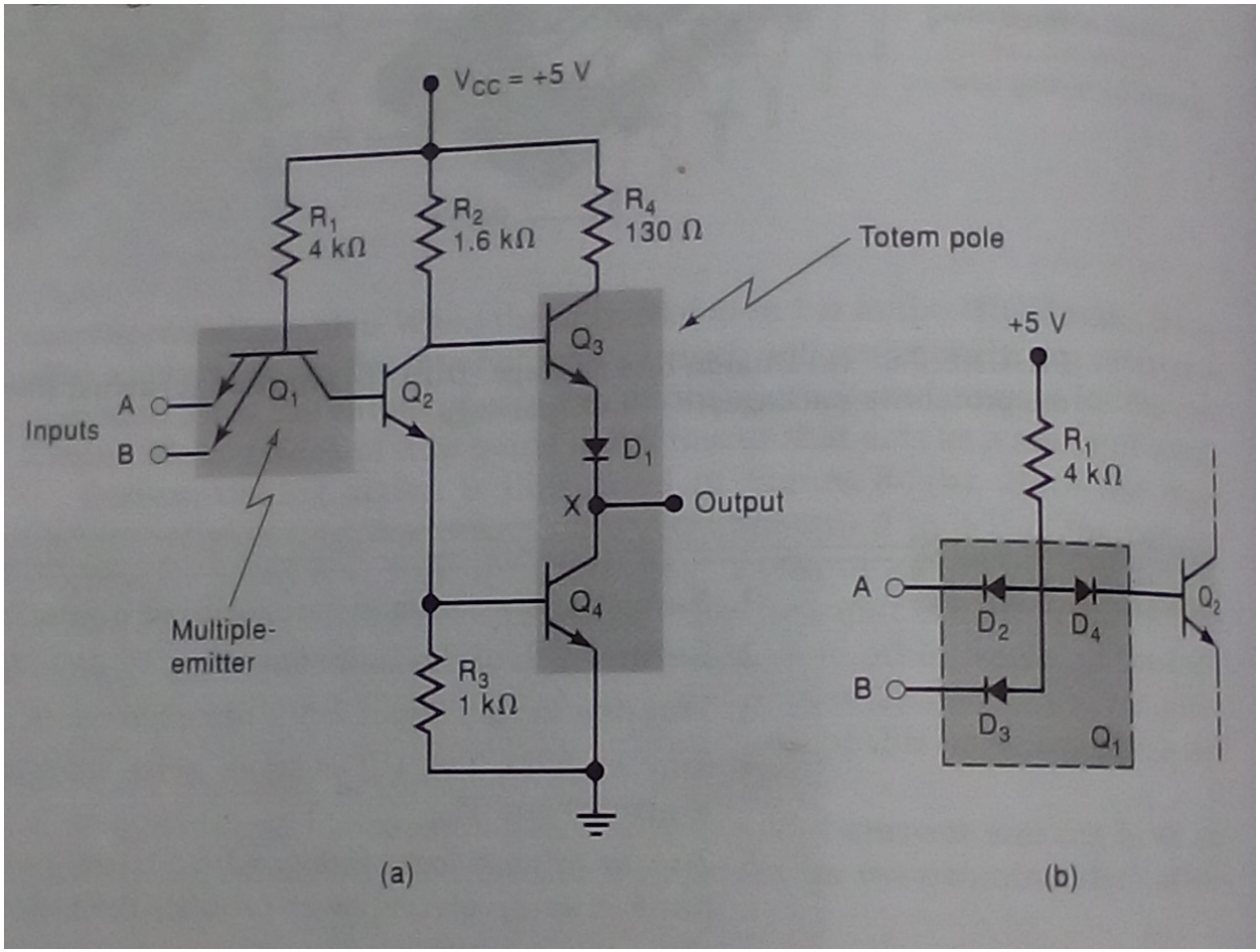

TTL NAND gate in its Low output

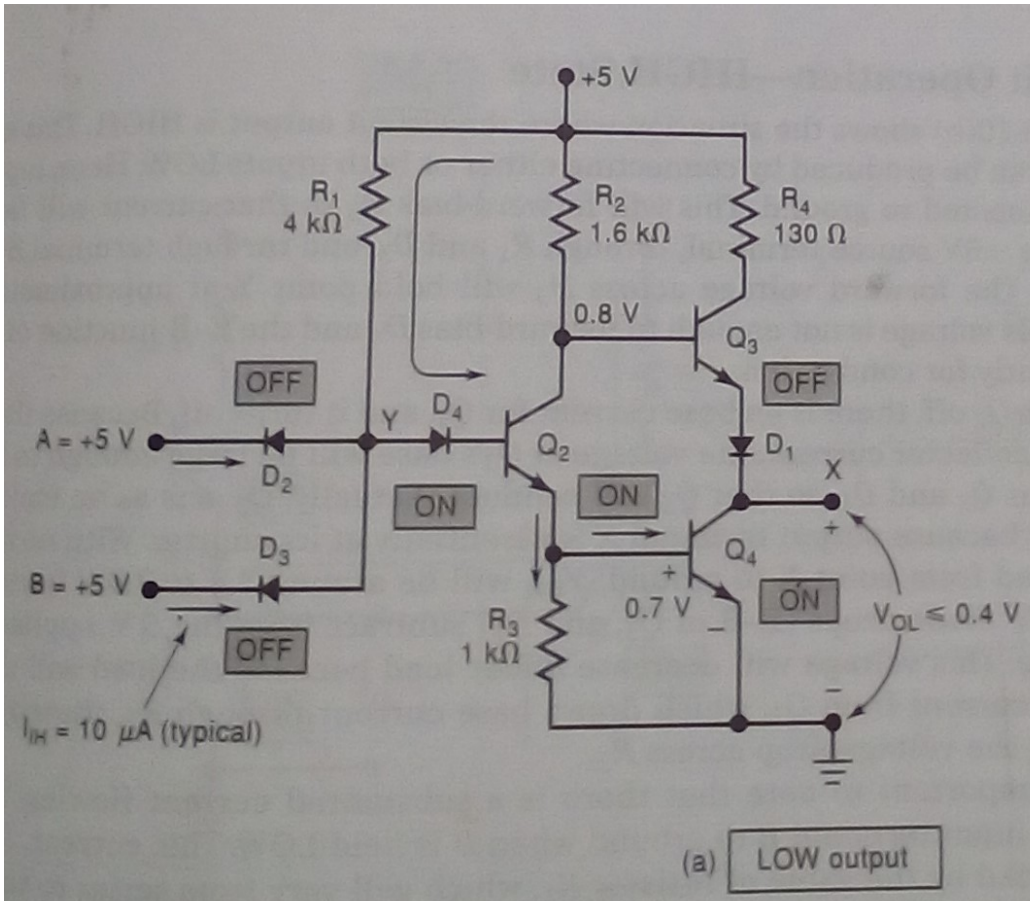

(a) LOW output

Input conditions	Output conditions
A and B are both HIGH (≥ 2 V)	Q_3 OFF
Input currents are very low I_{IH} = 10 μA	Q_4 ON so that V_X is LOW (≤ 0.4 V)

TTL NAND gate in its High output

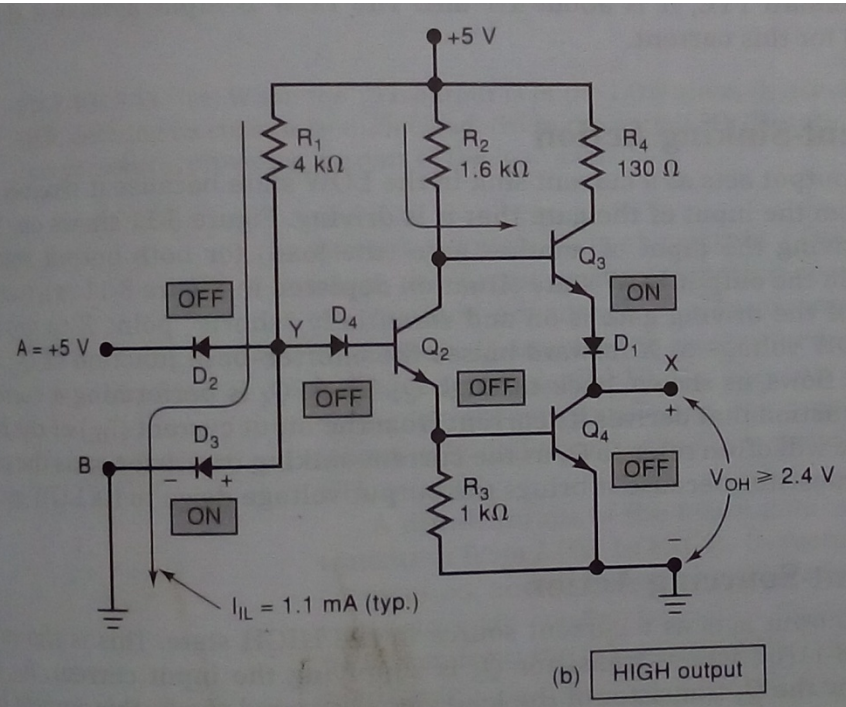

(b) HIGH output

Input conditions	Output conditions
A or B or both are LOW (≤ 0.8 V)	Q_4 OFF
Current flows back to ground through LOW input terminal. I_{IL} = 1.1 mA	Q_3 acts as emitter-follower and $V_{OH} \geq 2.4$ V, typically 3.6 V